Option Table		
Project		Configuration
Intelligent Security	Electro-hydraulic directional transmission	●
	Full set of OPS	○
	Stamping special-shaped overhead guard	●
	Tilt cylinder self-locking valve	●
	Heli intelligent fleet management system	○
	Foldback prefilter	○
	main power switch	○
	Fuel tank cap with lock	●
	Fire extinguisher	○
Comfort & Convenience	Full suspension seat	○
	Suspended overhead guard	●
	Descent buffer	●
	Front and rear adjustable steering column	●
	Reversing horn handle	○
	USB interface	○
	Instrument identification	○
	Electric fan	○
	Reversing voice horn	○
	Meet the latest emission power (National IV/National III)	●
	Load-sensing steering	●
	Full LCD instrument	●
	High exhaust	●
Cab	Front windshield	○
	Rear windshield	○
	Overhead guard	●
	Integral cab	○
	Integral cab (installed with heater)	○
	Integral cab (installed with heater & cooling air conditioner)	○
	Integral cab (installed with cooling air conditioner)	○

Option Table		
Project		Configuration
Lamplight	LED lights	●
	LED rear working lights (2 pcs)	○
	Warning light (rotating)	○
	Warning light (rotating buzzer)	○
	Warning light (flashing)	○
	Blue light	○
Lifting System	Basic mast	●
	Full free mast (2-stage or 3-stage)	○
	Non-standard attachments	○
	Mast height	○
	Fork arm carrier	○
	Load-backrest	○
Other	Metric thread	●
	American standard thread	○
	Solid tire	○
	Tilt cylinder sheath	○
	Steering cylinder sheath	●
	Universal key	○
	Customized colors	○

Note: Standard●;Optional○.

* Details of specifications and equipment are based on information available at time of printing and may change without notice.

HELI AMERICA INC

ADD: 4025 Welcome All Road, Suite 150 Atlanta, GA30349, U.S.A.
E-MAIL:heli@heliforkliftamerica.com
TEL: 404-242-3288

FIC(G3RT)009 AN
Design&Print:Fokeli Printing _ 20230103

CPCD 20/25/30/35

KU1Y2G3 2WD / KU5Y2G3 2WD / KU5Y4G3 4WD

4000-7000 lbs

G3 series Internal Combustion Counterbalanced
Rough Terrain Forklift Truck

HELI

Rough Terrain
Forklift Truck

Off-road wide base tires with large treads

SUPERIOR DESIGN

- Fashionable and Aesthetic streamlined design
- Stable and reliable performance
- Dual drive or four-wheel drive off-road tires
- Widely used in fields, farms, orchards and other tough road conditions

Powerful & Efficient

- Multi-position gearbox with flexible connection;
- Dual drive or four-wheel drive, energy conservative and high efficient;
- Flexible connected drive axle with ultrahigh configuration;
- Greatly improved off-road performance hydraulic system with load sensing valve, faster lifting speed;
- Lightweight mast, widened frame and upper beam of optimized design high carrying capacity.

Radiator

Stable & Reliable

- Off-road wide base tires with large treads;
- Improved radiator structure, optimized cooling system, better heat dissipation performance;

Pedal Mechanism

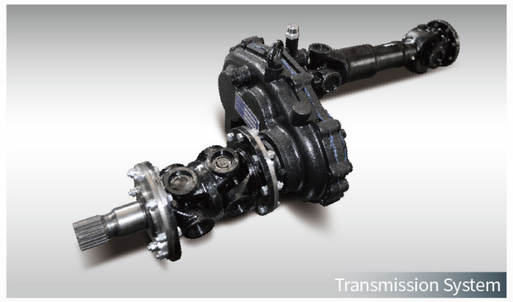

Transmission System

Meter

- In-position sensing system,effectively avoid misoperation;
- Optimized drive line system, larger ground clearance, lower center of gravity, improved stability and passability;
- Pedal mechanism optimization: inching pedal is connected to inching valve directly;
- Ip65 digital lcd meter;
- Sealing structure of 24 cone rubber hose, add “0” type sealing ring, better sealing effect.

Enjoyable Driving Experience

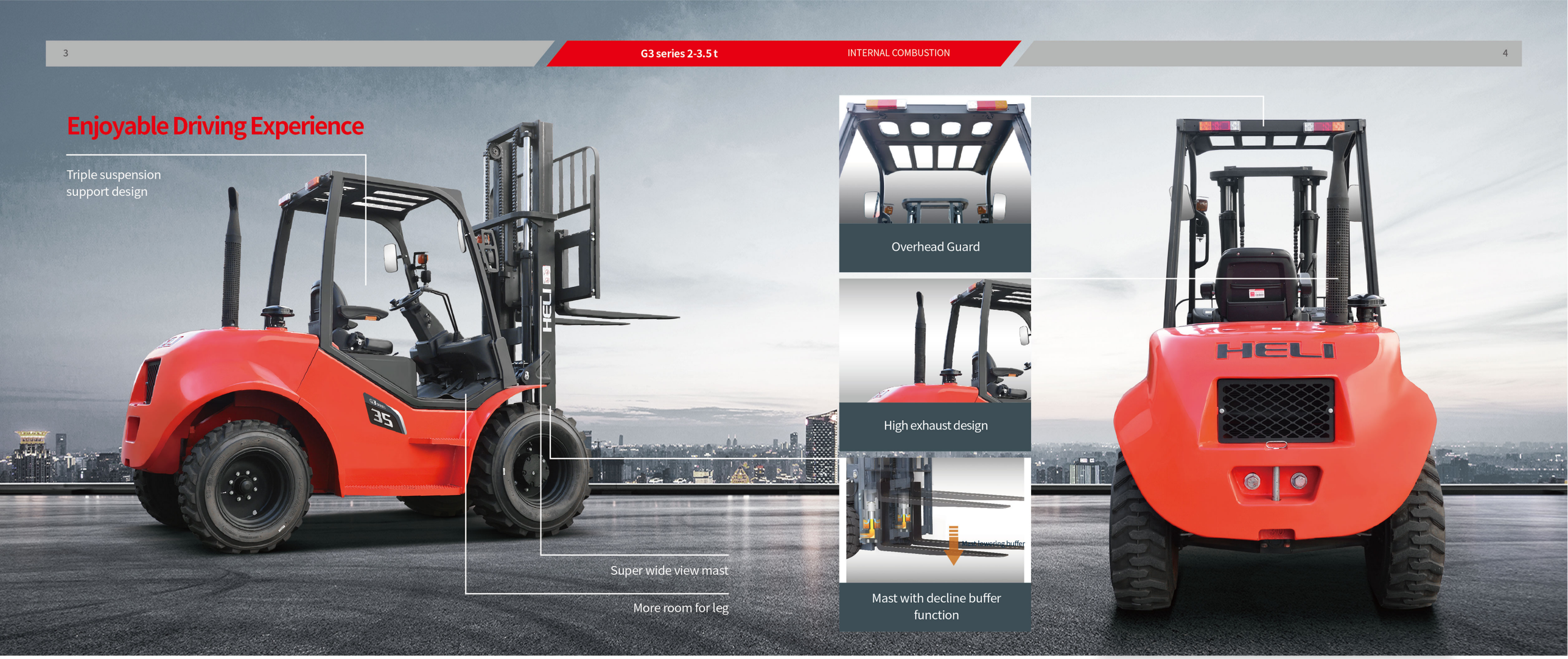

Ergonomic instrument panel: integrated handle switch, ratchet type hand brake and integrated electro-hydraulic reversing handle

Easy to Maintain

LED lamps, energy efficient, long life, no maintenance

Modular high protection electrical box

Engine cover with large opening angle, large maintenance space

Manufacturer and Technical Data(4000-7000 lbs Standard Dual drive)

Characteristics							
1.01	Manufacturer			HELI			
1.02	Model			CPCD20	CPCD25	CPCD30	CPCD35
1.03	Configuration number			KU1Y2G3(2WD)	KU1Y2G3(2WD)	KU1Y2G3(2WD)	KU1Y2G3(2WD)
1.04	Rated capacity		lbs	4000	5000	6000	7000
1.05	Load center distance		in	24		24	
1.06	Power mode			Diesel		Diesel	
1.07	Driving mode			Seat-type		Seat-type	
Weight							
2.01	Total weight		lbs	9920	10250	11023	11464
Tyres							
3.01	Tyre type			Tubeless tyre		Tubeless tyre	
3.02	Wheel numbers front/rear(x=driven wheels)			2X/2		2X/2	
3.03	Tyre size,front			14-17.5-16TL		14-17.5-16TL	
3.04	Tyre size,rear			10-16.5-10TL		10-16.5-10TL	
Dimensions							
4.01	Lifting height	H	in	118	118	118	118
4.02	Mast height (fork to the ground, vertical mast)	H1	in	89	89	89	89
4.03	Max. height, extended(with backrest)	H2	in	159	159	166	166
4.04	Free lifting height	H3	in	6.3	6.3	6.3	6.3
4.05	Height of overhead guard	H4	in	96	96	96	96
4.06	Min. ground clearance	H5	in	11	11	11	11
4.07	Height of backrest	H13	in	40	40	45	45
4.08	Overall length (with/without fork)	L/L'	in	166/124	166/124	166/124	167/125
4.09	Wheel base	L1	in	79	79	79	79
4.10	Front overhang	L2	in	23	23	23	23
4.11	Rear overhang	L3	in	22	22	22	24
4.12	Overall width	W1	in	65	65	65	65
4.13	Track width(front/rear)	W3	in	48/50	48/50	48/50	48/50
4.14	Adjustment range of fork(outside fork Max./Min.)	W5	in	53/9.8	53/9.8	55/9.8	55/9.8
4.15	Min. outside turning radius	r	in	134	134	134	136
4.16	Mast tilt angle(forward/backward)	α/β	deg.	10°/12°	10°/12°	10°/12°	10°/12°
4.17	Fork size:thickness*width*length	T×W×L4	in	1.6×4.8×42.1	1.6×4.8×42.1	1.8×4.9×42.1	2.0×4.9×42.1
4.18	Min. right-angle aisle width	Ra	in	130	130	136	138
Performance							
5.01	Travel speed(laden/unladen)		mph	11.2/11.2		11.2/11.2	
5.02	Lift speed(laden/unladen)		fpm	94.5/102.4		94.5/102.4	
5.03	Lowering speed(laden/unladen)		fpm	72.8/68.9		72.8/68.9	
5.04	Max. drawbar pull(laden/unladen)		lbf	4047	4047	4047	4047
5.05	Max. gradeability(laden/unladen)		%	24	22	20	18
Combustion-Engine							
6.01	Engine manufacturer/Model			KUBOTA V2403-CR-TE5B		KUBOTA V2403-CR-TE5B	
6.02	Rated power/speed		hp/rpm	57/2400		57/2400	
6.03	Max. torque speed		lbft/rpm	144/1500		144/1500	
6.04	Cylinder number-bore*stroke		/L	4-87×102.4/2.434		4-87×102.4/2.434	
6.05	Emission			EU Stage V /EPA Tier IV		EU Stage V /EPA Tier IV	
6.06	Transmission gears(front/rear)			1-1 Power Shift M/T		1-1 Power Shift M/T	

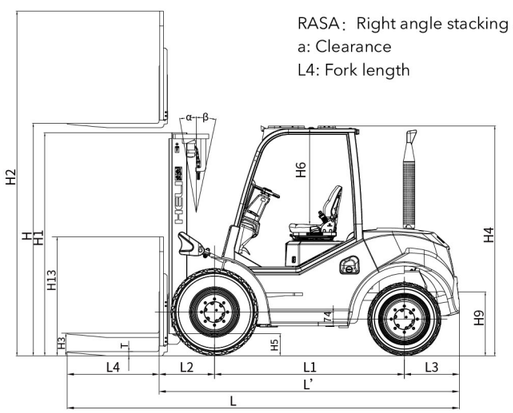

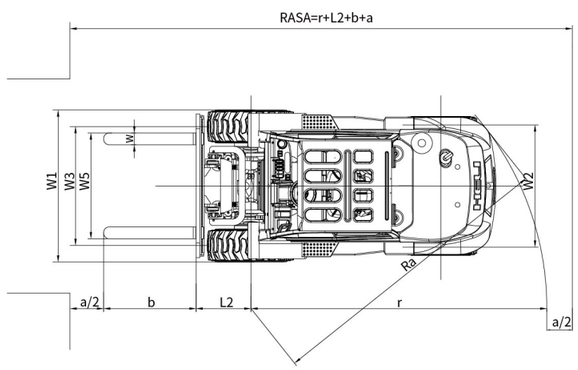

Manufacturer and Technical Data(4000-7000 lbs High Performance Dual drive)

Characteristics							
1.01	Manufacturer			HELI			
1.02	Model			CPCD20	CPCD25	CPCD30	CPCD35
1.03	Configuration number			KU5Y2G3(2WD)	KU5Y2G3(2WD)	KU5Y2G3(2WD)	KU5Y2G3(2WD)
1.04	Rated capacity		lbs	4000	5000	6000	7000
1.05	Load center distance		in	24		24	
1.06	Power mode			Diesel		Diesel	
1.07	Driving mode			Seat-type		Seat-type	
Weight							
2.01	Total weight		lbs	9920	10472	11244	11684
Tyres							
3.01	Tyre type			Tubeless tyre		Tubeless tyre	
3.02	Wheel numbers front/rear(x=driven wheels)			2X/2		2X/2	
3.03	Tyre size,front			14-17.5-16TL		14-17.5-16TL	
3.04	Tyre size,rear			10-16.5-10TL		10-16.5-10TL	
Dimensions							
4.01	Lifting height	H	in	118	118	118	118
4.02	Mast height (fork to the ground, vertical mast)	H1	in	89	89	89	89
4.03	Max. height, extended(with backrest)	H2	in	159	159	166	166
4.04	Free lifting height	H3	in	6.3	6.3	6.3	6.3
4.05	Height of overhead guard	H4	in	96.5	96.5	96.5	96.5
4.06	Min. ground clearance	H5	in	11	11	11	11
4.07	Height of backrest	H13	in	40	40	46	46
4.08	Overall length (with/without fork)	L/L'	in	166/124	166/124	166/124	168/126
4.09	Wheel base	L1	in	78.7	78.7	78.7	78.7
4.10	Front overhang	L2	in	22.8	22.8	23	23
4.11	Rear overhang	L3	in	22.0	22.0	22.0	23.6
4.12	Overall width	W1	in	64.6	64.6	64.6	64.6
4.13	Track width(front/rear)	W3	in	49.2/50.4	49.2/50.4	49.2/50.4	49.2/50.4
4.14	Adjustment range of fork(outside fork Max./Min.)	W5	in	55/9.8	559.8	55/9.8	55/9.8
4.15	Min. outside turning radius	r	in	128	128	134	136
4.16	Mast tilt angle(forward/backward)	α/β	deg.	10°/12°	10°/12°	10°/12°	10°/12°
4.17	Fork size:thickness*width*length	T×W×L4	in	1.6×4.8×42.1	1.6×4.8×42.1	1.8×4.9×42.1	2.0×4.9×42.1
4.18	Min. right-angle aisle width	Ra	in	130	130	130	132
Performance							
5.01	Travel speed(laden/unladen)		mph	12.4/12.4		12.4/12.4	
5.02	Lift speed(laden/unladen)		fpm	94.5/102.4		88.6/102.4	
5.03	Lowering speed(laden/unladen)		fpm	72.8/68.9		72.8/68.9	
5.04	Max. drawbar pull(laden/unladen)		lbf	8543	8543	8543	8543
5.05	Max. gradeability(laden/unladen)		%	50	46	40	36
Combustion-Engine							
6.01	Engine manufacturer/Model			KUBOTA V2403-CR-TE5B		KUBOTA V2403-CR-TE5B	
6.02	Rated power/speed		hp/rpm	57/2400		57/2400	
6.03	Max. torque speed		lbft/rpm	144/1500		144/1500	
6.04	Cylinder number-bore*stroke		/L	4-87×102.4/2.434		4-87×102.4/2.434	
6.05	Emission			EU Stage V /EPA Tier IV		EU Stage V /EPA Tier IV	
6.06	Transmission gears(front/rear)			2-1 Power Shift M/T		2-1 Power Shift M/T	

Load curve

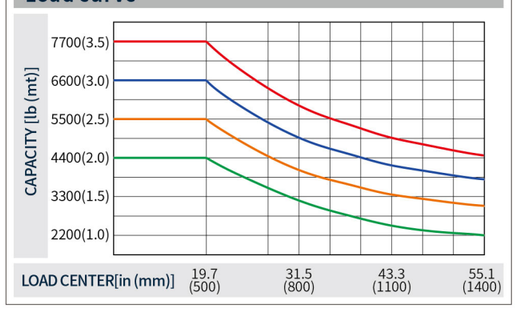

CPCD35 CPCD30 CPCD25 CPCD20

Note: The vertical axis stands for load capacity while the horizontal axis stands for load center which is calculated from the front surface of the forks to the gravity of the standard load. the standard load means a cubic with 39.4" edge length. When the mast is tilted forward, The worker using nonstandard forks for loading large goods, the load capacity will be reduced. The load capacity of standard mast at different load center can be known from this load chart.

Manufacturer and Technical Data(4000-7000 lbs Standard 4-wheel drive)

Characteristics							
1.01	Manufacturer			HELI			
1.02	Model			CPCD20	CPCD25	CPCD30	CPCD35
1.03	Configuration number			KU5Y4G3(4WD)	KU5Y4G3(4WD)	KU5Y4G3(4WD)	KU5Y4G3(4WD)
1.04	Rated capacity		lbs	4000	5000	6000	7000
1.05	Load center distance		in	24		24	
1.06	Power mode			Diesel		Diesel	
1.07	Driving mode			Seat-type		Seat-type	
Weight							
2.01	Total weight		lbs	10582	10913	11684	12125
Tyres							
3.01	Tyre type			Tubeless tyre		Tubeless tyre	
3.02	Wheel numbers front/rear(x=driven wheels)			2X/2		2X/2	
3.03	Tyre size,front			14-17.5-16TL		14-17.5-16TL	
3.04	Tyre size,rear			10-16.5-10TL		10-16.5-10TL	
Dimensions							
4.01	Lifting height	H	in	118	118	118	118
4.02	Mast height (fork to the ground, vertical mast)	H1	in	89	89	89	89
4.03	Max. height, extended(with backrest)	H2	in	159	159	166	166
4.04	Free lifting height	H3	in	6.3	6.3	6.3	6.3
4.05	Height of overhead guard	H4	in	96.5	96.5	96.5	96.5
4.06	Min. ground clearance	H5	in	11	11	11	11
4.07	Height of backrest	H13	in	40	40	46	46
4.08	Overall length (with/without fork)	L/L'	in	166/124	166/124	163/122	165/123
4.09	Wheel base	L1	in	78.7	78.7	78.7	78.7
4.10	Front overhang	L2	in	22.8	22.8	23	23
4.11	Rear overhang	L3	in	22.0	22.0	22.0	23.6
4.12	Overall width	W1	in	64.6	64.6	64.6	64.6
4.13	Track width(front/rear)	W3	in	49.2/50.4	49.2/50.4	49.2/50.4	49.2/50.4
4.14	Adjustment range of fork(outside fork Max./Min.)	W5	in	55/9.8	55/9.8	55/9.8	55/9.8
4.15	Min. outside turning radius	r	in	134	134	140	142
4.16	Mast tilt angle(forward/backward)	α/β	deg.	10°/12°	10°/12°	10°/12°	10°/12°
4.17	Fork size:thickness*width*length	T×W×L4	in	1.6×4.8×42.1	1.6×4.8×42.1	1.8×4.9×42.1	2.0×4.9×42.1
4.18	Min. right-angle aisle width	Ra	in	136	136	136	138
Performance							
5.01	Travel speed(laden/unladen)		mph	12.4/12.4		12.4/12.4	
5.02	Lift speed(laden/unladen)		fpm	94.5/102.4		88.6/102.4	
5.03	Lowering speed(laden/unladen)		fpm	72.8/68.9		72.8/68.9	
5.04	Max. drawbar pull(laden/unladen)		lbf	8543	8543	8543	8543
5.05	Max. gradeability(laden/unladen)		%	50	46	40	36
Combustion-Engine							
6.01	Engine manufacturer/Model			KUBOTA V2403-CR-TE5B		KUBOTA V2403-CR-TE5B	
6.02	Rated power/speed		hp/rpm	57/2400		57/2400	
6.03	Max. torque speed		lbft/rpm	144/1500		144/1500	
6.04	Cylinder number-bore*stroke		/L	4-87×102.4/2.434		4-87×102.4/2.434	
6.05	Emission			EU Stage V /EPA Tier IV		EU Stage V /EPA Tier IV	
6.06	Transmission gears(front/rear)			2-1 Power Shift M/T		2-1 Power Shift M/T	

HELI smart fleet management system (optional)

- Vehicle positioning
- Vehicle management
- Remote diagnosis
- Identification recognition (optional)
- Remote monitoring
- Weight management (optional)
- Maintenance reminder
- Collision management (optional)
- Statistical form

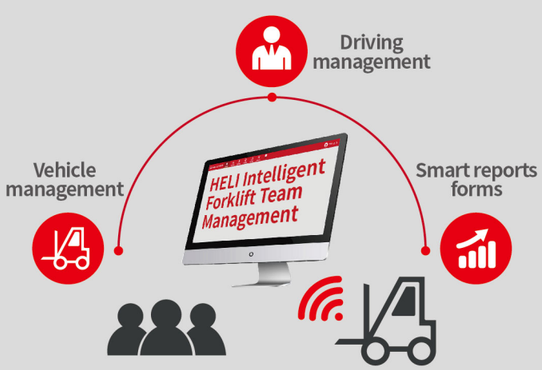

Wide View Standard Mast

Mast model	Max. lifting height (in)	load capacity@24" (lbs)				Lowered mast height (in)	Extended mast height (with backrest)(in)		Free lift height (in)	Service weight (lbs)				Mast tilting angle (α/β) (deg.)
		CPCD20	CPCD25	CPCD30	CPCD35		4000-5000 lbs	6000-7000 lbs		CPCD20	CPCD25	CPCD30	CPCD35	
M200	79	4000	5000	6000	7000	69	120	126	5.9	9921	10472	11023	11464	10°/12°
M250	98	4000	5000	6000	7000	79	140	146	5.9	10053	10604	11155	11596	10°/12°
M300	118	4000	5000	6000	7000	89	160	165	5.9	10141	10692	11244	11684	10°/12°
M330	130	4000	5000	6000	7000	95	171	177	5.9	10274	10825	11376	11817	10°/12°
M350	138	4000	5000	6000	7000	99	179	185	5.9	10318	10869	11420	11861	10°/12°
M370	146	4000	5000	6000	7000	103	187	193	5.9	10340	10891	11442	11883	10°/12°
M400	157	4000	5000	6000	7000	111	199	205	5.9	10494	11045	11596	12037	10°/6°
M425	167	3900	4400	5800	7000	116	209	215	5.9	10538	11089	11640	12081	10°/6°
M450	177	3700	4000	5800	6800	121	219	224	5.9	10560	11111	11662	12103	10°/6°
M475	187	3200	3600	5700	6700	126	229	234	5.9	10670	11222	11773	12214	10°/6°
M500	197	3000	3400	5200	6200	131	238	244	5.9	10759	11310	11861	12302	5°/6°
M550	217	2700	2900	4800	5800	142	258	264	5.9	10957	11508	12059	12500	5°/6°
M600	236	2400	2600	4000	5000	152	278	283	5.9	11067	11618	12170	12610	5°/6°

Wide View Full Free 2-stage Mast

Mast model	Max. lifting height (in)	load capacity@24" (lbs)				Lowered mast height (in)	Extended mast height (with backrest)(in)		Free lift height (in)	Service weight (lbs)				Mast tilting angle (α/β) (deg.)
		CPCD20	CPCD25	CPCD30	CPCD35		4000-5000 lbs	6000-7000 lbs		CPCD20	CPCD25	CPCD30	CPCD35	
ZM200	79	4000	5000	6000	7000	69	120	126	22	9965	10516	11067	11508	10°/12°
ZM250	98	4000	5000	6000	7000	79	140	146	32	10097	10648	11199	11640	10°/12°
ZM300	118	4000	5000	6000	7000	89	160	165	42	10185	10737	11288	11729	10°/12°
ZM330	130	4000	5000	6000	7000	95	171	177	48	10318	10869	11420	11861	10°/12°
ZM350	138	4000	5000	6000	7000	99	179	185	52	10362	10913	11464	11905	10°/12°
ZM370	146	4000	5000	6000	7000	103	187	193	56	10384	10935	11486	11927	10°/12°
ZM400	157	4000	5000	6000	7000	111	199	205	64	10538	11089	11640	12081	10°/6°
ZM425	167	3900	4400	5800	7000	116	209	215	69	10582	11133	11684	12125	10°/6°
ZM450	177	3700	4000	5800	6800	121	219	224	73	10604	11155	11707	12147	10°/6°
ZM475	187	3200	3600	5700	6700	126	229	234	78	10714	11266	11817	12258	10°/6°
ZM500	197	3000	3400	5200	6200	131	238	244	83	10803	11354	11905	12346	5°/6°
ZM550	217	2600	2800	4800	5800	142	258	264	95	11001	11552	12103	12544	5°/6°
ZM600	236	2200	2400	4000	5000	152	278	283	105	11111	11662	12214	12655	5°/6°

Wide View Full Free 3-stage Mast

Mast model	Max. lifting height (in)	load capacity@24" (lbs)				Lowered mast height (in)	Extended mast height (with backrest)(in)		Free lift height (in)	Service weight (lbs)				Mast tilting angle (α/β) (deg.)
		CPCD20	CPCD25	CPCD30	CPCD35		4000-5000 lbs	6000-7000 lbs		CPCD20	CPCD25	CPCD30	CPCD35	
ZSM360	142	3800	4800	5600	6600	79	183	189	32	10318	10869	11420	11883	10°/6°
ZSM400	157	3800	4800	5600	6600	85	199	205	38	10428	10979	11530	11971	10°/6°
ZSM435	171	3800	4800	5600	6600	89	213	219	42	10582	11133	11684	12147	10°/6°
ZSM450	177	3700	4300	5400	6400	91	219	224	44	10648	11199	11751	12214	10°/6°
ZSM470	185	3500	3800	5000	6000	94	227	232	46	10692	11244	11795	12258	10°/6°
ZSM480	189	3500	3800	5000	6000	95	231	236	48	10803	11354	11905	12368	10°/6°
ZSM500	197	3200	3600	4800	5800	99	238	244	52	10957	11508	12059	12500	5°/6°
ZSM540	213	2600	3000	4200	5800	103	254	260	56	11177	11729	12280	12721	5°/6°
ZSM600	236	2000	2300	3500	4500	111	278	283	64	11310	11861	12412	12853	5°/6°